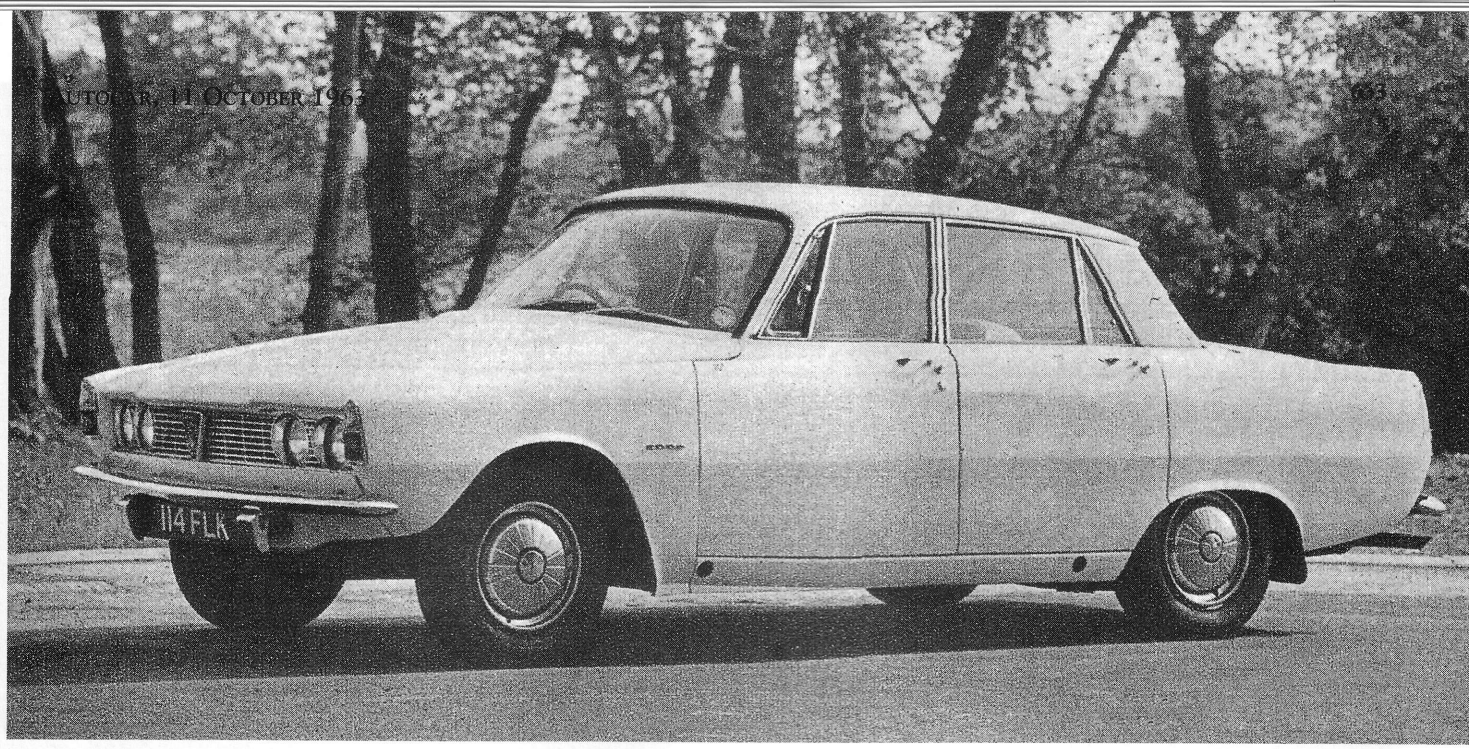

Styling of the 2000 is functional and practical, with good ground clearance. Sealed beam headlamps are used and the grille is an anodized aluminium extrusion

'64 Models

Rover 2000

A COMPLETELY NEW MODEL WITH CLEAN STYLING AND OUTSTANDING HANDLING QUALITIES

PRICE	Basic £	Total (inc. P.T.) £	s	d
Rover 2000 Saloon	1,046	1,264	9	7

IN a bid to regain a place in the medium -price, medium-size market where they had considerable success in the 1930s, Rover now announce their 2000 model. This is a 1,978 c.c. four-seater saloon, priced at £1,264, with de Dion rear suspension, a new four-cylinder single overhead camshaft engine, a new type of front suspension, all-round disc brakes and a multitude of innovations which not only make it one of the most technically advanced introductions but endow it with outstanding qualities of handling and comfort.

For the market at which the 2000 is aimed anything new must be justified by improved results. Thus, variable track de Dion rear suspension has been incorporated because it was considered to be the only layout combining predictable handling with low unsprung weight. The front suspension was chosen because it combined widely spaced, and therefore lightly loaded, wheel pivots with a reduction of braking nosedive and a reduced susceptibility to accidental damage. Another feature which will be appreciated by owners and insurance companies alike is the body construction, which consists of quickly detachable body panels fastened to a monococque base structure; the panels can be replaced with new ones finish-painted in the event of damage.

Engine

When designing the new engine, the Rover engineers precluded the use of

A full-width parcels shelf on top of the facia rail is an interesting innovation, as are the moulded plastic lockers, large enough to hold bulky objects. Fresh-air vents on the edge of the facia rail are adjustable for intensity and direction of flow. Production cars will have means of locating objects on this parcels shelf

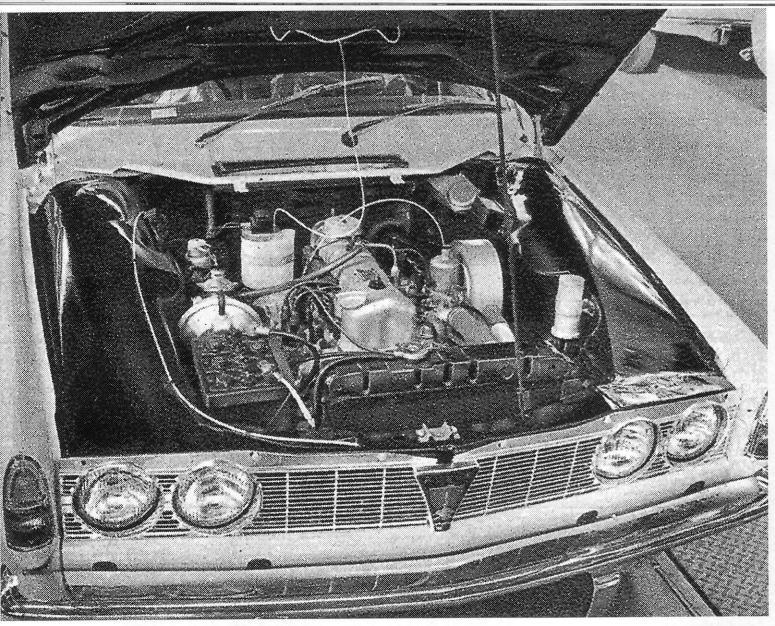

The long, over-square engine fills the bonnet, yet all the auxiliaries are readily accessible for servicing

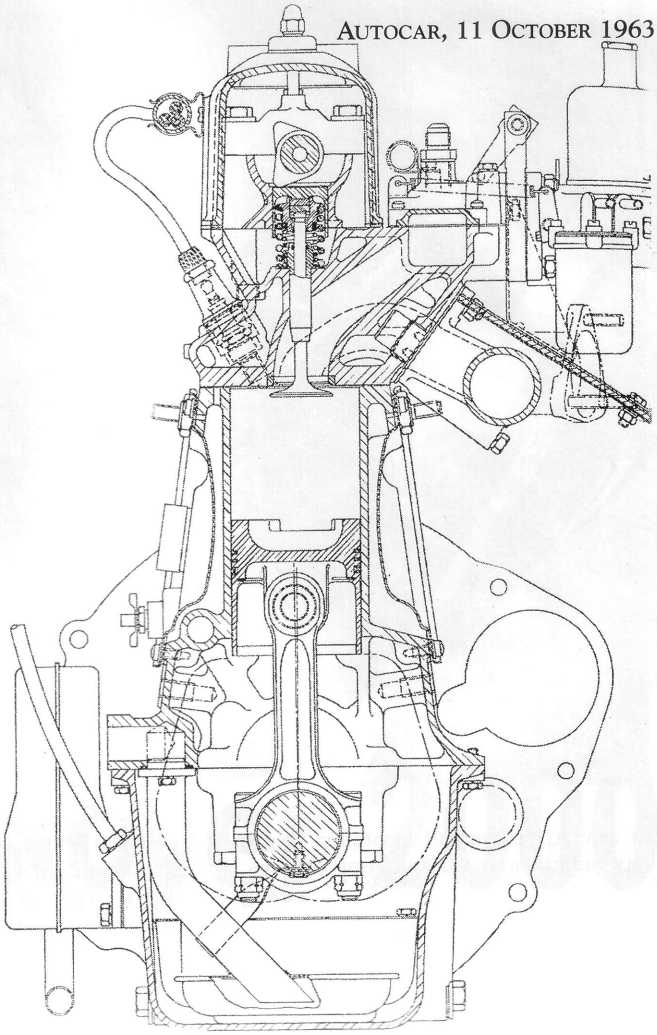

The heavy scantlings of the engine more than compensate for the slightly extra reciprocating weight resulting from this design of piston. With a single HS6 S.U. carburettor an output of 90 b.h.p. net is produced

Rover 2000 . . .

the familiar Rover "F" head with overhead inlet and side exhaust valves; there were several reasons for doing this. The claimed advantages of the "F" head layout are more theoretical than real, for it does not provide a good combustion chamber form and is also relatively expensive to manufacture. Furthermore, with its high surface-to-volume ratio it has no place in an engine with modern proportions: the new Rover power unit is square, with equal dimensions for the bore and stroke (85.7mm –3.375in.) for a displacement of 1,978 c.c. It was therefore decided to follow diesel practice and invert the combustion space by placing the chamber in the piston where there was greater latitude, with its size and shape unbounded by the valve sizes used. Additional advantages are the ability to diecast the combustion chamber form to fine tolerances and simplification of the cylinder head machining. Finally, it was recognized that, in the interests of long life, the classical Henry-conceived operation of the valves by means of inverted bucket-type tappets and overhead camshaft driven by chains was not only superior technically but also desirable from the production angle.

In most respects the five-main-bearing engine follows normal practice, but it is unusual in having the inlet tracts integral with the diecast cylinder head, while there is a novel power take-off on the back of an extension of the timing case from which all the auxiliaries are driven. Output of the engine is 90 b.h.p. (net) at 5,000 r.p.m. and maximum torque in the installed condition is 114 lb. ft. at 2,750 r.p.m.; maximum engine speed is 6,000 r.p.m.

The cylinder head is manufactured as an aluminium gravity diecasting. A horizontal baffle cast into the head ensures that the cylinder deck and the area round the ports are well "scrubbed" with coolant before it passes into the upper part of the head.

Pistons are of the solid skirt Bricomatic type with a steel anti-expansion ring cast into the top of the skirt. There are two compression and one scraper rings fitted above the gudgeon pin, which is of the fully floating type and offset by 0.04in. towards the major thrust side to reduce kickover slap at t.d.c.

The forged-steel, five-main-bearing crankshaft runs in 2.50in. dia. Vandervell VP2 indium-flashed lead bronze bearings and carries a Holsett vibration damper on its front end. Big-end bearings are of 2.0in. dia. and have replaceable shells of the indium-infused lead-bronze type.

Bolted to the top face of the cylinder

A small jackshaft housing, bolted to the back of the timing case, provides a take-off point for all the auxiliary drives. The pump has a weir, shown alongside the petrol pump, in the suction side to keep it flooded

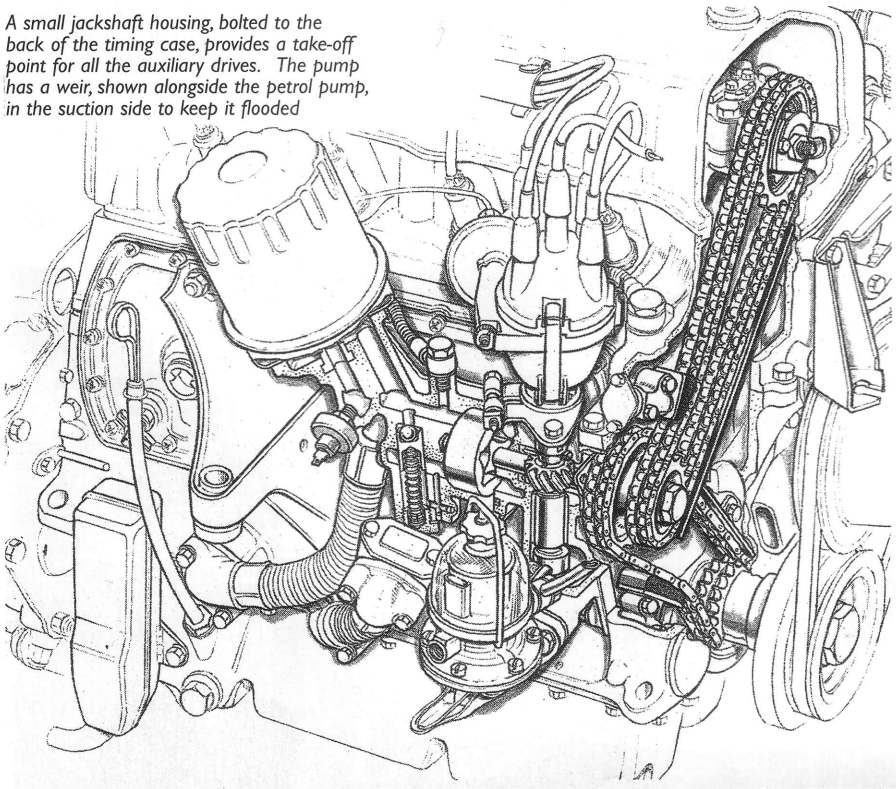

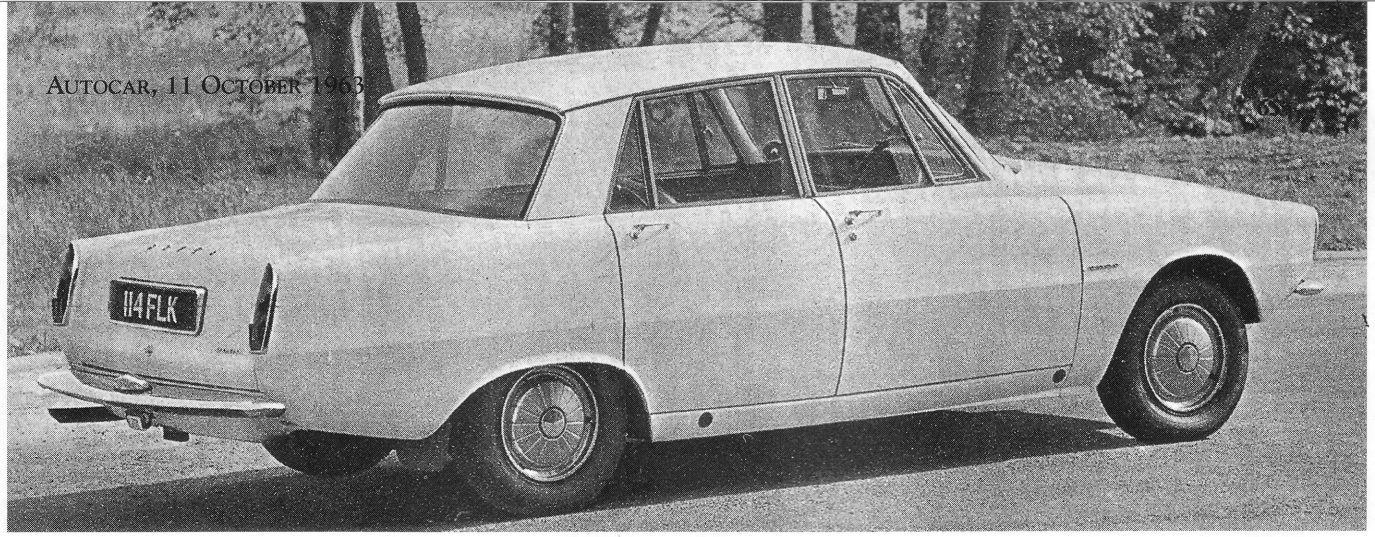

Corner panels are detachable and wheel trims and nave plates are in brush-finish stainless steel

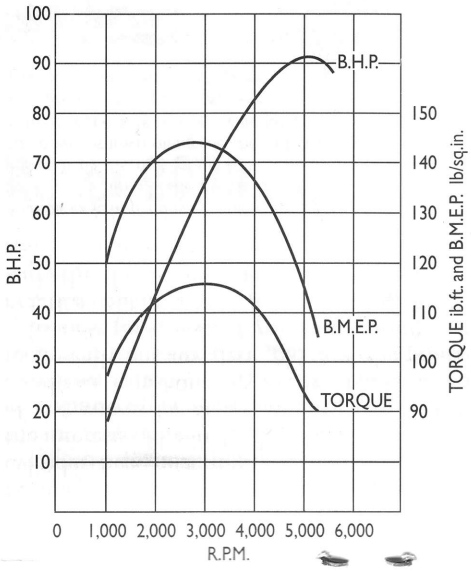

Power curves of the 1,978 c.c. engine show a 90 b.h.p. (net) output at 5,000 r.p.m

head is a cast-iron tappet block. In it is mounted the six-bearing camshaft, which is a chrome iron casting with chilled cast cams, and the inverted bucket-type tappets. An unusual feature for this design of valve gear is the use of two circular discs for adjustment of valve clearance, which appears to increase the reciprocating weight and undoubtedly contributes to the use of dual valve springs.

To ensure clear waterways between the cylinder jackets, the block has open sides. They are enclosed with pressed steel plates, zinc-coated to resist corrosion and attached with self-tapping screws. An innovation is the Pioneer silicone rubber-steel seal at the rear of the crankshaft; it is a one-piece moulding running on the outside of the flywheel mounting flange.

A skew gear in the middle of the jackshaft housing drives a vertical shaft to the distributor at the top and the petrol pump cam at the bottom. The Hobourn Eaton oil pump is flange mounted to the rear face of the housing and driven off the end of the shaft. The oil pump housing incorporates a pressure relief valve and a full-flow oil filter.

Power is transmitted through a Borg and Beck diaphragm spring clutch with hydraulic operation to the four-speed, all-synchromesh gearbox. This unit is quite conventional in layout, with Borg-Warner barrel-type synchromesh and single helical constant mesh gears. To eliminate gear lever chatter, the remote control change mechanism is mounted on the transmission tunnel, with a single operating rod to the selector fingers protruding through the rear of the gearbox.

Primarily to introduce some wind-up in the transmission, and incidentally to reduce propeller shaft length, the hypoid final drive unit has a long nosepiece housing a bevel pinion extension which is waisted to act as a torsion bar. The aim is to provide a controlled degree of flexibility in the drive line.

Dunlop Series III disc brakes are mounted inboard on the final drive casing. The front brakes are completely shielded to protect them from grit and water, and have 10.75in. dia. discs with the calipers set behind the hub line. A vacuum servo unit is combined with the common hydraulic circuit for the front and rear systems.

Front Suspension

At an early stage in the design programme the intention was to install an alternative gas turbine power unit in the P6 (the factory code name of the new car), driving the rear wheels, but the T4 front-wheel-drive installation turned out to be more efficient. However, the front suspension and steering system designed to go round a portly gas turbine unit was retained because of the advantages it offered in space saving and immunity from minor collision damage.

It is virtually an unequal length wishbone layout with the upper triangle turned through 90 deg so that it can be pivoted on the scuttle, thus eliminating the need for suspension pillars. To give even more space the coil springs have been taken away from their usual position and mounted horizontally in the top of the front wing valances, the suspension movement being transmitted to

Adjustment of the valve timing is by means of a vernier coupling in the upper camshaft sprocket. A transverse baffle in the cylinder head ensures a good flow of coolant

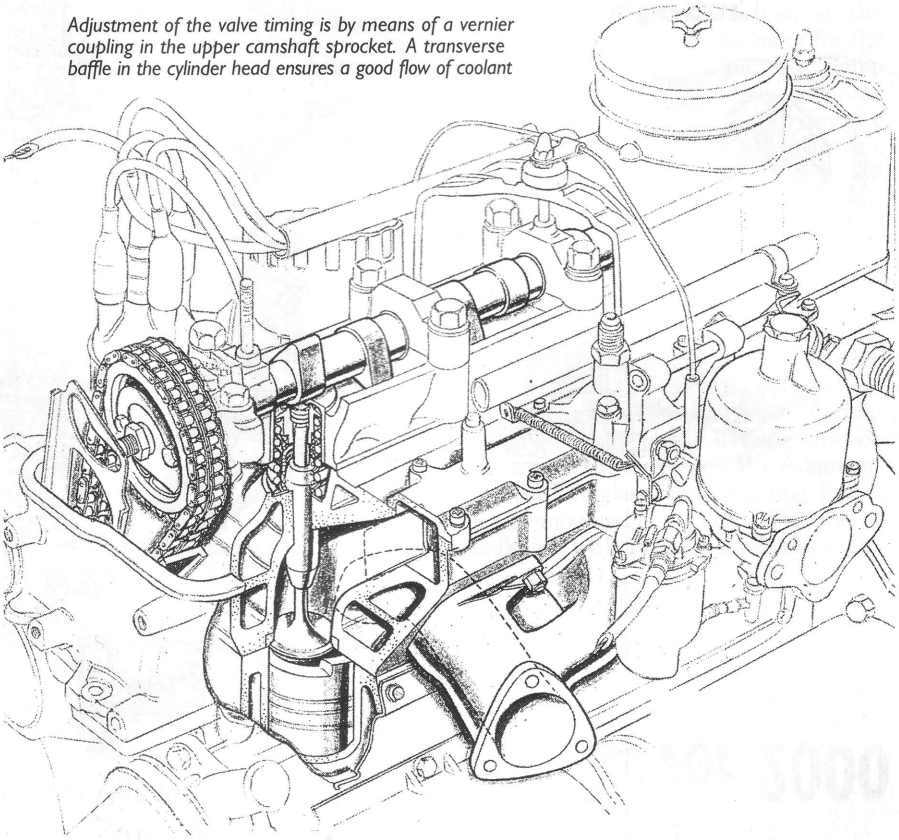

AUTOCAR, 11 OCTOBER 1963

Rover 2000

1,978 c.c

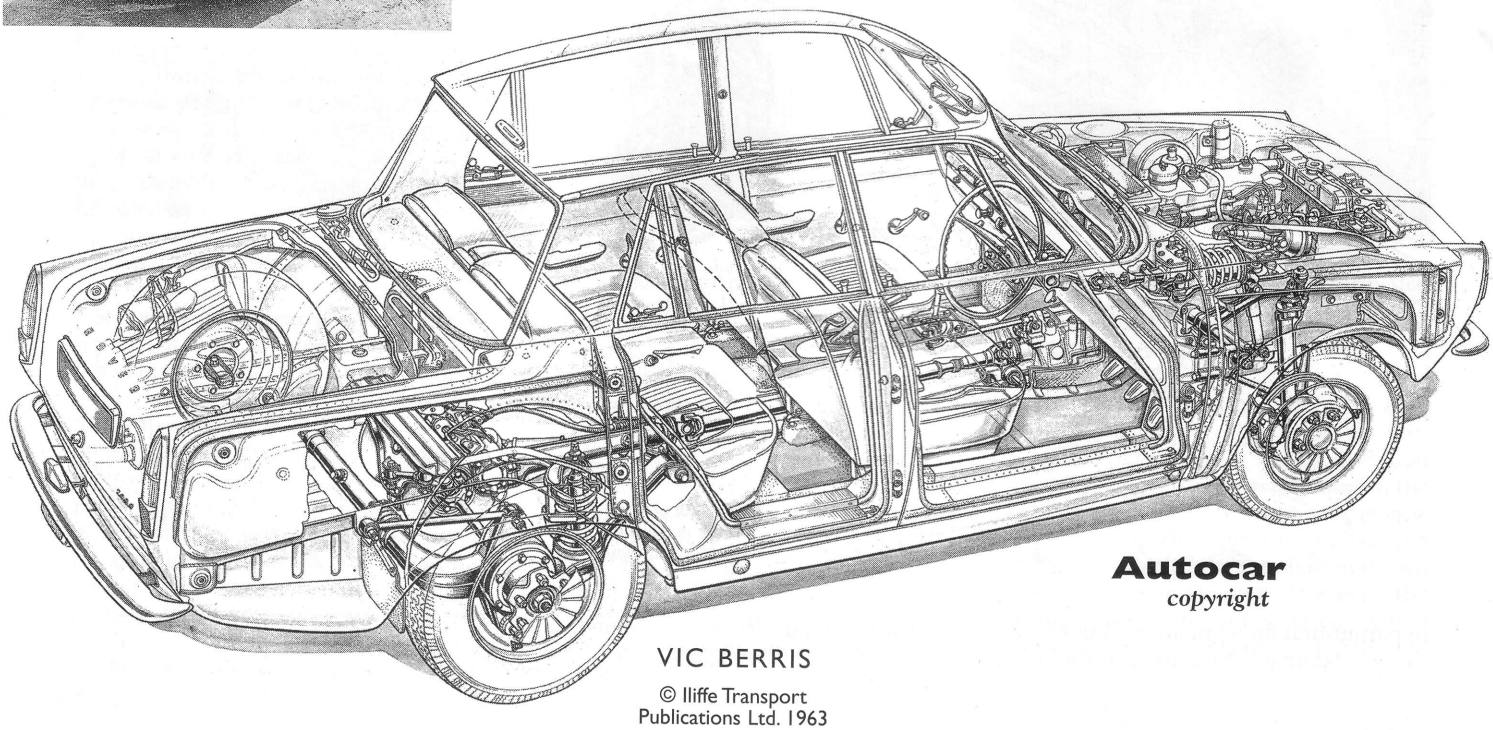

Autocar
copyright

VIC BERRIS

The layout of the 2000 bears no relation to previous Rover practice in either its suspension or engine design, but there has been no relaxation of quality and finish. The detachable body panels are fixed with setscrews into jig-drilled tapped holes

In the variable track de Dion layout the sole job of the de Dion tube is to keep the back wheels parallel to each other. The inboard disc brakes have self-adjusting handbrake mechanism with a warning light switch in the linkage. The diagram shows how the telescopic joint, which has its own oil bath, slides as the wheels rise and fall

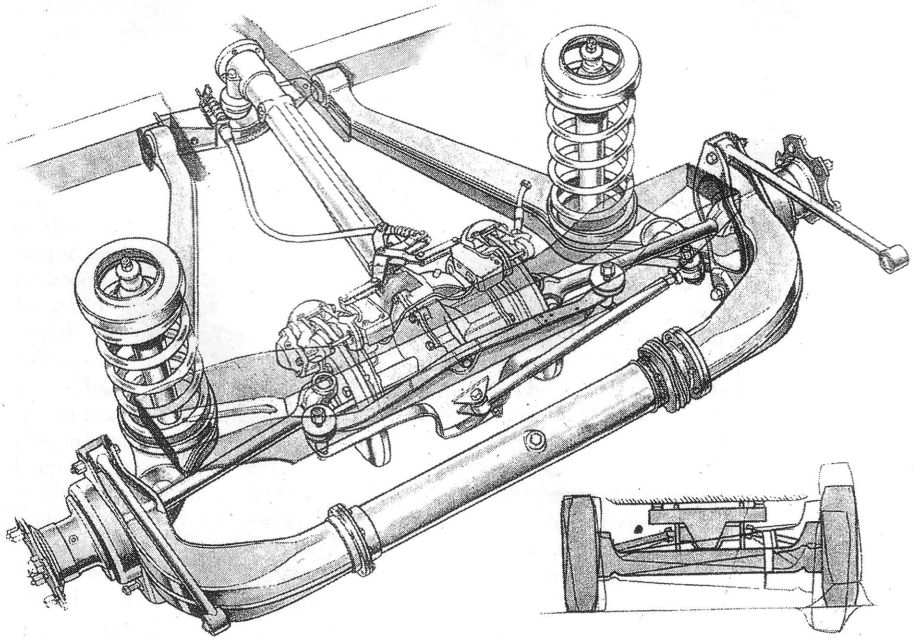

them by pushrods from the cranked upper links. By careful location of the fulcrum points of the upper arm it is possible to provide slight forward inclination of the kingpost, which counters "nosedive" when braking.

The upper suspension arms are tapered forgings with a boss at the knuckles serving as an abutment for the road spring pushrods. The arms clamp to stiff tapered counter-shafts mounted transversely in rubber bushes on the front face of the scuttle. The steering kingposts are fabricated from large diameter tubes with forged ends, these upper forgings combining the steering lever and ball joint. Impregnated nylon bushes are used in the kingpost ball joints and the radius arms are rubber bushed to eliminate greasing points.

The steering cross linkage assembly, like the upper suspension, is based on the engine bulkhead, with drag links leading forward to the steering arms on the tops of the kingposts. The Adamant-Marles hourglass worm steering box is flange-mounted to the vertical face of the bulkhead with a Hooke-type joint in the

column. A double steering-arm system is used, one being connected directly to the right-hand drag link (on r.h.d. cars) and the other to a horizontal idler lever. A hydraulic steering damper is mounted between steering box and tie rod.

Rear Suspension

Half-shaft sliding splines are the Achilles heel of any de Dion and most fully independent rear suspension systems. Under power thay can bind and stiffen up the whole suspension, unless thay are of the expensive recirculating ball type. To overcome this defi-

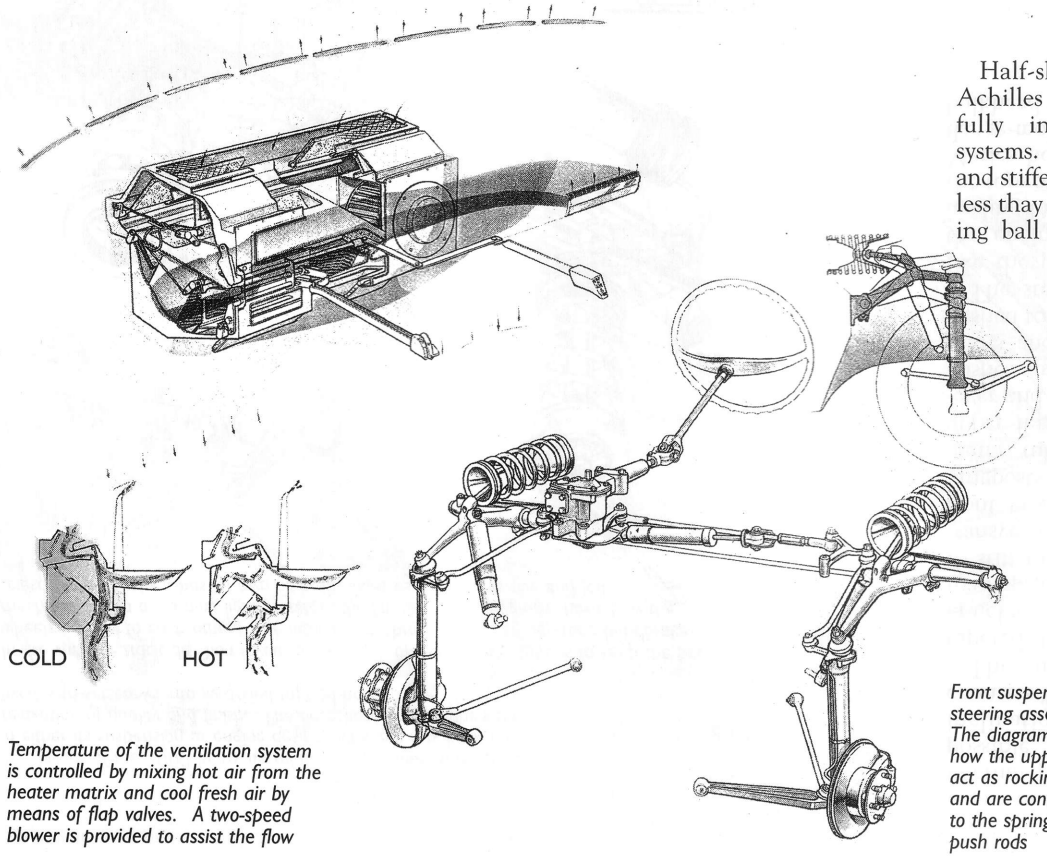

Temperature of the ventilation system is controlled by mixing hot air from the heater matrix and cool fresh air by means of flap valves. A two-speed blower is provided to assist the flow

Front suspension and steering assembly. The diagram shows how the upper links act as rocking levers and are connected to the springs by push rods

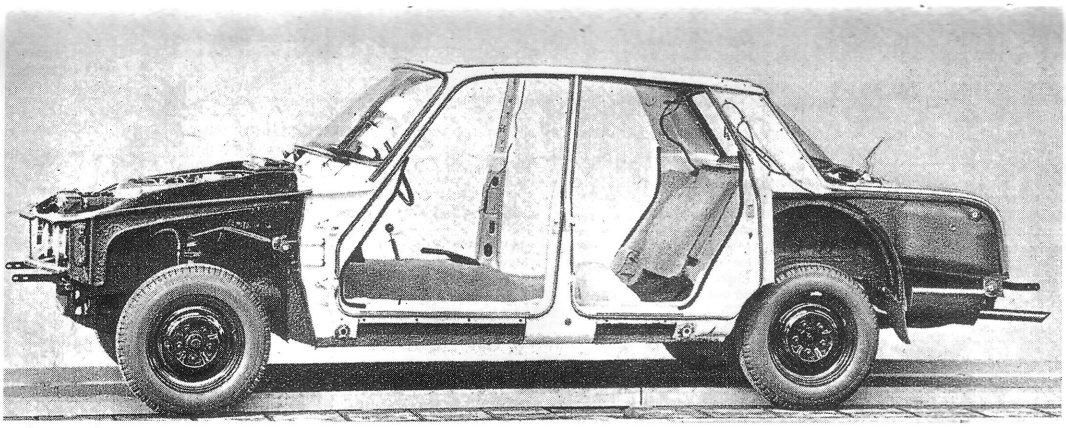

Rover 2000 . .

Even without doors or body panels the Rover 2000 is quite mobile and is given a preliminary test run at the factory in this condition. The labyrinth of tubes on the rear quarter panel is the petrol tank breather system

ciency, the half-shafts of the Rover 2000 are of the fixed length type and do double duty by providing transverse location; since the wheels move in an arc when viewed from the end or side of the car, the de Dion tube has a telescopic and torsionally free centre joint to accommodate these variations. It is located fore and aft by a Watt's linkage which absorbs driving and braking forces. Its telescopic central joint is a simple sliding bronze-bushed bearing incorporating an oil reservoir. Thus the only task of the de Dion beam is to keep the road wheels parallel.

The half-shafts are steel forgings with sealed-bearing Hooke joints, and the de Dion tube is built up around the tubular telescopic centre section. The forward arms of the Watt's linkages also act as spring levers; they are wide U-sec-tion pressings swaged out forward of the wheels to provide spring seatings.

Body Construction

Detachable body-panel construction automatically meant increased weight because none of the outer panels could be used as load bearers. However, the roof panel is attached to the base structure with close-spaced bolts and carries normal roof stresses, so that only the sill skins and front and rear wing panels are un-stressed panels.

The inner sills are box section members, and with the deep transmission tunnel carry the main beam loads of the structure. At the rear they are tied together with a deep box member, and amidships there is a double transverse wave in the floor which provides considerable stiffness. At the scuttle the stressed sills pick up with vertical box members tied together by a deep box member which is also the transverse hot air duct from the heater. The upper links of the front suspension are mounted on the front face of this duct. The scuttle is stiffened further by a U-shaped transverse section formed by the ducts for the face-level fresh-air supply.

Behind the final drive casing, light box section members extend aft from the sills to support the luggage compartment and to provide anchor points for the rear arms of the Watts' linkage.

Forward of the scuttle, the front wing valances support the radiator and grille carrier, while at their lower edges they pick up with box section engine support side members. These in turn are joined at their forward extremities by a large U-shaped transverse member. The whole front end of the car is therefore exceptionally rigid.

Once the mechanical elements are fitted to the basic body hull the partly assembled car can be driven and tested for mechanical noise before the painted

panels and the trim are added. Doors swing on a new type of adjustable ball point hinge developed by Rover to cut out the need for skilled door fitting.

From the outset an interior layour with four separate seats was planned. All are upholstered in real hide with shaped backs and deep roll surrounds.

Fore and aft adjustment of the front seats is 8.62in., and they have fully reclining backs as standard equipment. The reclining mechanism is of Rover design and is infinitely variable. A secondary workshop adjustment is provided to bring the main locking levers into their original operating arc should wear take place.

Swing-down plastic-moulded lockers, crushable in the event of an accident, are fitted under the facia. The visible surfaces are padded and trimmed in leather to match the seats. There are no door pockets, the only interior stowage other than that mentioned being on the rear parcels shelf. Deep pile carpets cover front and rear floors, and the headlining is in washable plastic.

All the instumentation, including a horizontal ribbon type trip speedometer, is in a rectangular binnacle mounted on the parcels shelf in front of the driver. Switches are grouped on the narrow facia rail, the starter ignition switch in the middle and the lighting, sidelamp, headlamp and screenwiper switches on either side. The rotary switch for the variable speed wipers is combined with the electric screen washer switch and has a distinctive knob for touch indentification in the dark.

New Type Heater

A completely new Smith's heater system has been designed for the 2000; it is of the hot matrix type used by Rolls-Royce and Bentley. There is a permanent flow of hot water through the heater matrix and the temperature of the air supply into the car is controlled by mixing streams of hot and cold air inside the heater box.

A supply of cool air to two "face level" outlets on the edges of the facia rail opposite the front seat passengers is channelled off the cold chamber and regulated by flaps on the outlet grilles.

Behind the Rover 2000 there is five years of development and 555,000 miles of road testing. The results of this work have produced a car which is not only complete in its specification but, as shown by our road test, is at least equal, and better than most, in its road manners. Furthermore, at its price of £1,264, no concessions have been made to the traditional Rover Standards of finish and furnishings – it represents remarkable value for money.

Specification

ENGINE (front mounted, water cooled)
No. of cylinders .... 4 in-line
Bore ..... 85.7mm (3.375 in.)
Stroke..... 85.7mm (3.375 in.)
Displacement ..... 1,978 c.c. (120.8 cu. in.)
Valve operation..... Chain-Driven, overhead camshaft
Compression ratio .. 9.0 to 1
Max b.h.p (net) ..... 9.0 at 5,000 r.p.m.
Max b.m.e.p (net) ... 141 p.s.i. at 2,750 r.p.m.
Max torque (net).... 113.5 ib ft at 2,750 r.p.m.
Carburettor ..... Single S.U. Type HS6
Fuel Pump..... AC mechanical
Tank capacity ..... 12 Imp. gallons (54.5 litres) (including reserve)
Sump capacity..... 8 pints (4.5 litres) (plus 1 pint in filter)
Oil filter ..... Full-flow, interchangeable element
Cooling System..... Pump, fan and thermostat
Battery ..... 12 volt, 60 amp. hr.

TRANSMISSION
Clutch..... Single dry plate, diaphragm spring, hydraulically operated 8.5 in. dia.
Gearbox ..... Four-speed, synchromesh on all forward gears, remote central floor change
Overall gear ratios .. Top 3.54; 3rd 4.92; 2nd 7.55; 1st 12.83; reverse 12.14
Final Drive..... Hypoid, 3.54 to 1

CHASSIS
Frame ..... Monococque base structure with detachable panels
Brakes..... Dunlop disc, servo-assisted
Disc dia. ..... F, 10.75in., R, 10.25 in.
Suspension : front ... Independent, leading top link, transverse bottom link, horizontal coil springs, anti-roll bar
rear .. Variable track de Dion with fixed length drive shafts and Watts linkage location. Coil springs.
Dampers..... Telescopic, non-adjustable
Wheels ..... Pressed steel 5.0in. rims, 5 studs
Tyre Size..... Pirelli Cintura (tubed) 165 x 14in. Dunlop SP (tubeless) 6.50 x 14in.
Steering..... Adament-Marles hour-glass, worm and roller
Steering wheel..... Two-spoke, 17in. dia. adjustable column
Turns Lock to Lock 3.75

DIMENSIONS
Wheelbase ..... 8ft 7.4 in. (263cm)
Track: front..... 4ft 5.4in. (135cm)
Track: rear 4ft 4.5in. (133cm)
Overall length..... 14ft 10.5 in. (453cm)
Overall width 5ft 6in. (163cm)
Overall height..... (un - 4ft 6.75in. 139cm) laden)
Ground clearence... 8.5in. (22cm)
Turning circle ..... 35ft 7in. (10.7m) (between walls)
Kerb weight ..... 2,767lb - 24.7 cwt (1,255 kg) (with 5 gallons fuel)

PERFORMANCE DATA
Top gear m.p.h. per 1,000 r.p.m..... 19.5
Torque lb. ft. per cu. in. engine capacity 0.94
Brake service swept by linings ..... 436 sq. in.
Weight distribution.. F, 53.7 per cent
R, 46.3 per cent