Oily BITS

THAT CLUTCH SLAVE

Any body with a modicum of familiarity with a P6 would know about the clutch slave cylinder. This component has a nasty tendency to let you down at a most inconvenient time. It fails by suddenly, and without warning, permitting a good portion of its fluid to escape from the system. When this happens, the driver's effort on the clutch pedal will not be transmitted onto the clutch lever thereby making it extremely difficult, or even impossible to engage or change gear.

To be fair, clutch slave failure is something which any motor vehicle with a hydraulically operated clutch is prone to. But I got the impression that the P6 suffers from it a bit more than average. When it happens, the options are: either a repair on the spot, (not normally feasible) or get it towed to a garage (usually expensive). In any case, it is embarrassing, especially when other (non Rover) marques are around.

But before pointing an accusing finger towards the slave cylinder, I ought to explain that it could be the master which is at fault. When this happens, the fluid pressure distorts the primary cup allowing fluid to escape into the reservoir. There will be no external leaks and one indication that this has happened, would be a rise in the level of fluid inside the reservoir on the master.

MASTER CYLINDER 15.8mm (5/8")

Master cylinders in the 15.8mm (5/8") size range have undergone certain design changes to the internal components and these are shown below

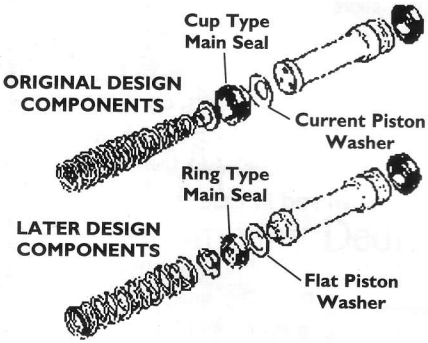

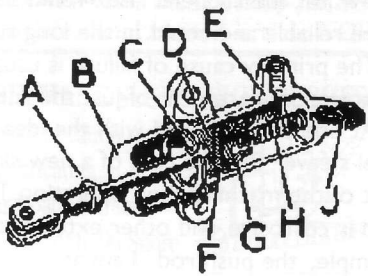

Slave Cylinder Assembly

A – Push rod	F – Piston seal
B – Dust cover	G – Filler for piston seal
C – Circlip	H – Return spring
D – Piston	J – Bleed screw
E – Body	

It pays when one watches what the original equipment manufacturers are doing. Somewhere along the line, Lockheed have modified their 5/8 inch bore master cylinders, which is the size used on the P6.

They have modified the design of the plunger to take a different type of cup. It can be observed that the modified plunger has features which increases its production cost when compared to the old one. Therefore the reason for the modification must have been to improve the reliability or performance, or both, of the unit.

One of the very first cost cutting exercises British Leyland did when taking over the production of the P6 was the deletion of the circlip from the slave cylinder. It is obvious that the purpose of the circlip was, primarily, to prevent the spring from pushing the nylon filler, seal and piston out of the cylinder when not fitted to the car. But the spring being comparatively weak, there is not much chance of that happening. Therefore that circlip was not really necessary. But that circlip was useful as a datum when setting the pedal travel so that clutch lever is fully depressed without over loading.

Fortunately, the clutch slave on the Series I P6 is the same one as used on a Mini and Lockheed and Girling have continued the production of such a slave with the circlip.

Therefore we were able to stick to originality and pay Morris/Austin Mini prices to boot. This state of affairs has lasted for many years, until, that is, some organisation, by the name of DELPHI have come on the scene and apparently has taken over the production of Lockheed parts. The last time I bought a slave cylinder from them it had a Part Number LL10469 and the circlip and groove are no more.

I wrote earlier that the slave fails without warning. Well, actually, that is not entirely true.

In fact, failure is usually preceded by signs of leakage of fluid from the back of the slave. The problem is that the slave is situated under the car quite out of sight. During routine servicing, one should raise the car on a lift or crawl under, pull back the dust cover from the slave and examine for leaks of clutch fluid. Even the slightest indication of leaking fluid warrants a replacement of the complete unit. One would be tempted to renew just the rubbers. That would be a bit risky. Complete replacement is definitely more reliable and could, in the long run, be the less expensive method.

The primary cause of failure is usually corrosion in the slave cylinder bore. If there is corrosion, replacement of just the rubber is a waste of money because they will not last.

At one time, I played with the idea of boring out a slave cylinder and fit a stainless steel sleeve. But the cost of a new slave is not all that high and would not justify the cost of the machine shop operation. This is especially true when one notices that clutch fluid is corrosive, and other external parts of the linkage, over the years, corrode, for example, the push rod . I am at present toying with the idea of making a new push rod from a piece of stainless steel rod. For the convenience of any member who fancies taking up the idea, I give below the dimensions of the push rod in case the old one is badly corroded.

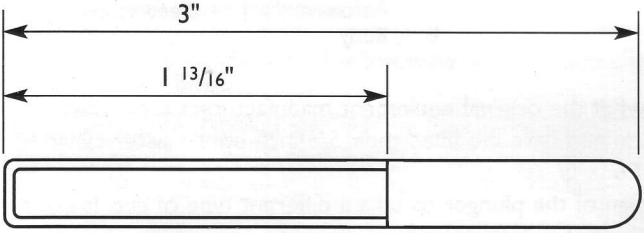

When it comes to fitting back the unit, one has to keep in mind that the assembly is made up of a cast iron slave cylinder attached to an aluminium bell housing by means of high tensile steel screws. These metals have vastly different stress/strain properties and the

distribution of stresses, both during assembling, as well as under operating conditions, could be critical. But Rover has all worked it out for us. They recommend a tightening torque of 30 pounds feet.

Finally, bleeding the system could be a bit trying. I found, through experience, that once the master cylinder reservoir is full of fluid, detach the slave from the housing hold in a vertical position, bleeder pointing upwards, attach a bleeding tube and release the bleeder. The chances are that fluid would flow down under gravity and would bleed the system in the process. You will need an assistant to keep the reservoir full all the time. If fluid does not flow downwards of its own accord, you can help it by attaching a syringe to the bleed tube and withdraw fluid until no air bubbles are seen coming out of the slave through the tube. At this point, just nip the bleeder, and detach the tube. I have done this many times and I was never able to prevent dribbling some hydraulic fluid on the floor or on myself.

Once the system is bled, fit the slave back to the housing and torque the screws. Tighten the bleeder to a good hand tight and replace the rubber cap on the nipple. Note you need not pump the pedal at any time until you come to try it. Properly bled, the pedal should have a 1/4-inch free play.

Finally, make sure the hydraulic pipe connecting master cylinder to slave is anchored to the clip at the sump, its grommet is in good condition and that fuel and hydraulic pipes or any wiring do not foul each other or can rub and chafe against sharp edges.

Even after taking all the precautions in the world assemblies do not always function impeccably.

J. A. Zahra – MALTA

Joe wins this issue's free years membership for his excellent technical article. Send in your article NOW!