Keeping Cool Under Pressure

Grantley Beckles

Air conditioning as fitted into some vehicles today is no longer the luxury it once was. Most vehicle manufacturers can now fit this option to the majority of their range, in fact it's more cost effective for them to install a/c than to modify a vehicle to accept a sunroof!

Large proportions of the cars built today are along the lines of our P6's with large glass areas. This creates a greenhouse effect inside the vehicle, an a/c system has the ability to remove heat and de-humidify the interior to keep you cool in the summer and demist the windows quickly in winter. No wonder Rover saw fit to list a/c as an option and fit it as standard to several overseas models.

A good air conditioning system provides the interior with cleaner than normal air, and in re-circulation mode prevents exhaust fumes and the like penetrating the interior which can be particularly beneficial in heavy traffic. Those of you who are lucky enough to have a/c in your P6 will of course know about the benefits!

There are two types of refrigerant that can be used in a vehicle a/c system these are commonly known as R12 and R134A. Since 1993 the R12 coolant has been phased out. Any vehicle now built in the UK and Europe with a/c now runs on R134A, as does your domestic fridge and freezer.

Air conditioning on the V8 models was, as has been said, an optional extra from 1971 onwards, I am lucky enough to own such a car but when I got it the a/c had not worked for at least eight years...
I decided to sort it out.

For starters I needed a compressor, new ones for a P6 are more difficult to locate then hen's teeth so it had to be a reconditioned unit. The clutch had to be changed, so did the

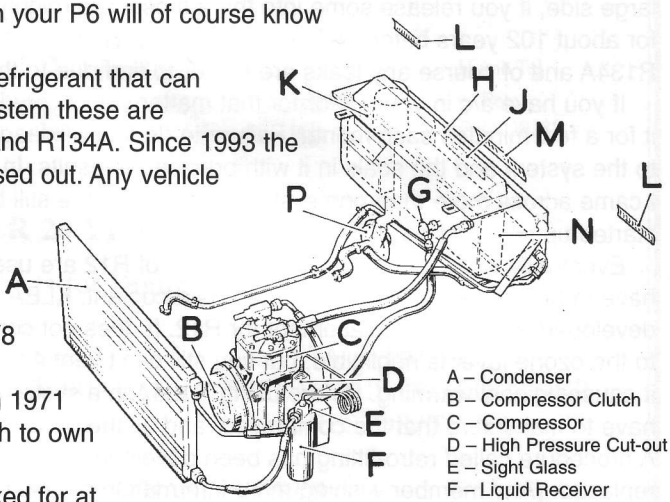

A – Condenser
B – Compressor Clutch
C – Compressor
D – High Pressure Cut-out
E – Sight Glass
F – Liquid Receiver
G – Expansion Valve
H – Evaporator
J – Fresh Air Intake
K – Blower
L – Face Level Outlets
M – Face Level Outlets
N – Heat Exchanger
P – Water Valve

filter drier and the expansion valve, the price for all these bits was quite hefty even with a trade discount! With all the bits fitted, the system was evacuated and charged to the correct operating pressure.

As a rule the a/c in a P6 is a good unit and works well but the whole system must be 100%. I have not gone into detail on the charging and flushing process of the system as you do need a solid understanding of the basic refrigeration circuit, specialised tools, refrigerant disposal facilities and a safe working environment. Not really the job for a Sunday afternoon on the drive!

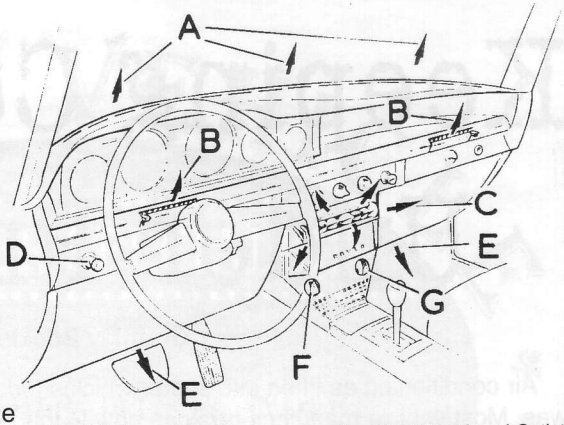

A – Windscreen Outlets
B – Side Face Level Outlets
C – Central Face Level Outlet
D – Compressor Isolating Switch
E – Fixed Foot Level Outlets
F – Temperature Control
G – Airflow Control

As stated earlier R12 has now been phased out but there are a lot of cars out there, not just P6's, that use the stuff. It is still available, if you know where to look, but it is now very expensive. R12 is an excellent refrigerant, but it had to go because it contains chlorine which is one of the chemicals responsible for all that damage to the ozone layer you read about in your Sunday papers. Its depletion time is on the large side, if you release some into the atmosphere (highly illegal!) it will hang around for about 102 years before it finally goes away. R12 also outperforms its replacement R134A and of course any leaks are easier to find due to the chlorine.

If you have a/c in your P6 or for that matter your everyday car you should operate it for a few minutes each month. Failure to do this will lead to a lack of lubrication to the system and the seals in it with predicable results. In my search for parts I came across more than one system that could have still been working had it been started up now and again.

Eventually when all the remaining stocks of R12 are used up all a/c systems will have to be converted to R134A. There is a coolant, KLEA 134A, that has been developed as a direct replacement for R12. It does not contain chlorine so damage to the ozone layer is negligible, but you still can't vent it to the atmosphere because it causes global warming. Before using R134A in a system designed for R12 you have to make sure that the compressor and all the other bits are compatible.
A procedure called retro-fitting has been developed, certain components have to be replaced. (Any member wishing more information on this can get in touch with me via the Editor.)

Today air conditioning is fast becoming the norm from up-market cars to offices, restaurants and even the humble supermarket. Although the latter applications come under the heading of commercial systems, and as such are a little more complex, the principal remains the same... it's all in the cause of keeping you cool under pressure.